WILLIAMS

16-3025-101
June 1, 1984

T U R K E Y S H O O T®

SERVICE MANUAL

For service...

Call your authorized
WILLIAMS distributor

WILLIAMS
Electronics, Inc.
3401 N. California Ave.
Chicago, IL 60618

TURKEY SHOOT
ROM SUMMARY

ROM	PART NO.	DESCRIPTION	IC NO.	BOARD	ERROR CODE OR INDICATION
Sound ROM	A-5343-10706	2764 PROM, 8Kx8	IC8	CPU	no sound
TURKEY SHOOT 2	A-5343-10707	2732 PROM, 4Kx8	IC9	CPU	feathers
TURKEY SHOOT 3	A-5343-10708	2732 PROM, 4Kx8	IC10	CPU	spkr clicks
TURKEY SHOOT 4	A-5343-10709	2764 PROM, 8Kx8	IC11	CPU	213
TURKEY SHOOT 5	A-5343-10710	2764 PROM, 8Kx8	IC12	CPU	209
TURKEY SHOOT 6	A-5343-10711	2764 PROM, 8Kx8	IC13	CPU	205
TURKEY SHOOT 7	A-5343-10712	2764 PROM, 8Kx8	IC14	CPU	201
TURKEY SHOOT 8	A-5343-10713	2764 PROM, 8Kx8	IC15	CPU	214
TURKEY SHOOT 9	A-5343-10714	2764 PROM, 8Kx8	IC16	CPU	210
TURKEY SHOOT 10	A-5343-10715	2764 PROM, 8Kx8	IC17	CPU	206
TURKEY SHOOT 11	A-5343-10716	2764 PROM, 8Kx8	IC18	CPU	202
TURKEY SHOOT 12	A-5343-10717	2764 PROM, 8Kx8	IC19	CPU	215
TURKEY SHOOT 13	A-5343-10718	2764 PROM, 8Kx8	IC21	CPU	207
TURKEY SHOOT 14	A-5343-10719	2764 PROM, 8Kx8	IC23	CPU	216
TURKEY SHOOT 15	A-5343-10720	2764 PROM, 8Kx8	IC24	CPU	none
TURKEY SHOOT 16	A-5343-10721	2764 PROM, 8Kx8	IC25	CPU	208
TURKEY SHOOT 17	A-5343-10722	2764 PROM, 8Kx8	IC26	CPU	204
Special Chip 2	A-5410-10083	Special Chip	IC29	CPU	--
Special Chip 2	A-5410-10083	Special Chip	IC30	CPU	--
Clock-ROM 1	A-5282-10295	82S123 ROM, 32x8	IC14	VIDEO	no video
TURKEY SHOOT 21	A-5343-10726	2764 PROM, 8Kx8	IC41	VIDEO	vert lines
Horiz-sync ROM 1	A-5282-10294	82S129 ROM, 256x4	IC47	VIDEO	--
TURKEY SHOOT 18	A-5343-10723	2732 ROM, 4Kx8	IC55	VIDEO	gobbles
TURKEY SHOOT 19	A-5343-10724	2764 PROM, 8Kx8	IC57	VIDEO	vert lines
TURKEY SHOOT 20	A-5343-10725	2764 ROM, 8Kx8	IC58	VIDEO	vert lines
Decoder-ROM 5A (Horizontal)	A-5282-10292	6349 ROM, 512x8	IC60	VIDEO	--

CPU-BOARD JUMPERS: W1, W3, W6, W8, W10, W11, W14 and W16. Remove jumper W11 for cocktail games.

NOTICE

TO ORDER REPLACEMENT ROMS from your authorized WILLIAMS distributor, specify (1) part number shown above, (2) ROM-label color, (3) REV level (number) on the label, and (4) which game the ROM is used in.

Examine your Game

[ ]INSPECT THE OUTSIDE of the carton or game cabinet for shipping damage.

[ ]UNLOCK AND OPEN the bottom-rear door. Now check circuitry.

[ ]ARE CONNECTORS SECURELY ATTACHED? Reconnect any found loose. DON'T FORCE CONNECTORS. They're keyed and only fit one way.

[ ]ARE PLUG-IN CHIPS FIRMLY SEATED in their sockets?

[ ]UNWRAP THE POWER CORD coiled inside the cabinet. DON'T PLUG IT IN YET!

[ ]SCRUTINIZE MAJOR SUBASSEMBLIES, such as the monitor, control panel, transformer chassis and power supply. Make sure they're securely-mounted.

[ ]UNDO THE CONTROL-PANEL LATCHES. You can reach these two from the coin door by extending your arm upward and to either side. Now check connectors and circuitry as above.

Control Locations

//THE ON-OFF SWITCH is below the back door.

//THE POWER-INTERLOCK SWITCH is behind the bottom-right corner of the back door. The interlock switch is a spring-loaded DPDT type that will turn off the game when you remove the panel. For servicing purposes, pull the switch out and the game will power up.

//THE VOLUME-CONTROL is inside the coin-door and to your right.

//THREE DIAGNOSTIC SWITCHES are mounted together on a bracket behind the coin door. These switches are used to access the Diagnostic-Mode Tests, the BOOKKEEPING TOTALS screen and the GAME ADJUSTMENTS screen.

//THE MEMORY-PROTECT INTERLOCK SWITCH is behind the coin door. This switch must be open when you clear BOOKKEEPING TOTALS or make GAME ADJUSTMENTS. It automatically opens when the coin door is open.

//THE CPU-BOARD RESET SWITCH is on the CPU board near the batteries.

//THE CASHBOX ADVANCE SWITCH found inside the cashbox door allows bookkeeping information to be audited without permitting it to be zeroed.

//THE SOUND DIAGNOSTIC SWITCH is on the CPU board near the small heatsink. Refer to Sound Self-Test for information on its use.

Power Turn-On

WARNING

THREE-WIRE PLUG. This game must be plugged into a properly-grounded outlet to prevent shock hazard and to assure proper game operation. DO NOT use a "cheater" plug to defeat the ground pin on the power cord, and DO NOT cut off the ground pin.

WARNING

FCC STICKER. Check the back of your game to see that an FCC sticker was attached to your game at the factory. All games that leave WILLIAMS' plants have been tested and found to comply with FCC Rules. As the sticker is proof of this fact, legal repercussions to the owner and distributor of the game may result if the sticker is missing. If you receive any WILLIAMS game (manufactured after December 1982) that has no FCC sticker, call WILLIAMS for advice or write us a note on your game-registration card. Be sure the card bears your game's serial number.

WHEN THE GAME IS FIRST TURNED ON general illumination should light. A moment later the scanning "rug pattern" indicating RAM/ROM test should appear on the screen.

IN A CORRECTLY-RUNNING GAME tests will be followed by the message "INITIAL CHECKS INDICATE ALL SYSTEMS GO." If failure messages come up on the screen instead, refer to Built-In Test Procedures.

DEMAGNETIZE THE GAME with a television degaussing-coil. Besides the monitor, remember to degauss large steel parts (for example, the back-door hinge). Do this as a daily procedure. Otherwise residual magnetism may cause color impurities that adversely affect your collections.

Game Operation

GAME START

INSERT COINS. The game allocates an adjustable number of credits per coin and displays this number on the CRT. Factory settings are one credit for two quarters. At factory settings, when two credits are displayed, pressing 2-PLAYER START initiates a two-player game.

PLAYER CONTROLS

//SHOOT mischievous turkeys with the laser gun.

//PRESS GOBBLE! Freeze the turkeys and pick them off with the gun!

//PRESS GRENADE! Eliminate several turkeys in one blast!

GAME PLAY

WITH A HAND ON HIS GUN, his GOBBLE and GRENADE buttons at the ready, the player defends his territory from marauding TURKEYS! He's given 100 missions to eliminate all the turkeys.

HE CAN TAKE AIM with his laser gun using the cursor on the screen to home in on his enemies. Or he can launch a GRENADE to blast all turkeys within range. Once each mission he can activate his GOBBLE button to momentarily freeze all the turkeys.

ASTUTE PLAYERS learn that most turkeys can be eliminated by a shot to the body. However the cyborg mechano-turkey persists until they hit him in the head. No turkey will succumb to a shot in the leg!

MISSIONS REQUIRE QUICK REACTIONS to clever ploys such as turkey air-raids, turkeys disguising themselves as businessmen and turkey helicopter-getaways. Every 8th wave earns a rapid-fire bonus where the player has 15 seconds to eliminate as many turkeys as possible. The player can score bonus points by shooting fire hydrants and trashcans as well as by freeing hostages.

THREE FOWLUPS are allowed. These occur whenever a turkey escapes or when an innocent bystander is injured.

Bookkeeping Totals

BOOKKEEPING TOTALS SHOW YOU AT A GLANCE if game settings are bringing you a satisfactory return on your investment! Only games by WILLIAMS ELECTRONICS have this feature. Think of it as a unique way to keep your TURKEY SHOOT game the leader of the pack when it comes to earnings...location after location, week in and week out!

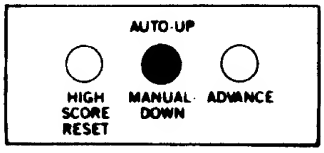

Diagnostic Button Switches

ENTERING BOOKKEEPING MODE. Inside the coin door is a bracket with three button switches. Set the AUTO-UP/MANUAL-DOWN (center) switch to AUTO-UP. Press the ADVANCE switch to display BOOKKEEPING TOTALS on the screen. Now check those totals. Here's what to look for...

BOOKKEEPING TOTALS

LEFT SLOT COINS	432
CENTER SLOT COINS	0
RIGHT SLOT COINS	398
PAID CREDITS	830
EXTRA MISSIONS EARNED	226
TOTAL PLAY TIME [HOUR: MIN]	34:28
TOTAL MEN PLAYED	689
TOTAL SINGLE PLAYER	548
TOTAL TWO PLAYER	141
TOTAL CREDITS PLAYED	830
AVERAGE TIME /GAME [MIN:SEC]	2:00

Bookkeeping screen

AVERAGE TIME PER CREDIT: TWO MINUTES. Your most important figure on the BOOKEEEPING TOTALS screen is AVERAGE TIME/GAME. You'll want to pay special attention to this figure every day for this reason: Thorough field and factory research has shown that two-minute games both satisfy players and also keep the quarters flowing.

If games aren't running about two minutes long, then collections probably aren't at their peak. You'll want to tailor your game to your game-playing public. It's easy. But only WILLIAMS games let you do it!

GAME ADJUSTMENTS

EXTRA FOWL EVERY	50000	RECOMMENDED
MISSIONS FOR 1 CREDIT GAME	3	RECOMMENDED
ATTRACT MODE SOUNDS	YES	
PRICING SELECTION	5	1/FIFTY 2/DOLLAR
LEFT SLOT UNITS	1	
CENTER SLOT UNITS	4	
RIGHT SLOT UNITS	1	
UNITS REQUIRED FOR CREDIT	2	
UNITS REQUIRED FOR BONUS CREDIT	0	
MINIMUM UNITS FOR ANY CREDIT	0	
DIFFICULTY OF PLAY	5	RECOMMENDED
GUN RECOIL	YES	
RESTORE FACTORY SETTINGS	NO	
CLEAR BOOKKEEPING TOTALS	NO	
HIGH SCORE TABLE RESET	NO	
AUTO CYCLE	NO	

[PLAYER 1 START] TO MOVE UP - [PLAYER 2 START] TO MOVE DOWN
[GOBBLE] TO INCREASE VALUE - [GRENADE] TO DECREASE VALUE

PRESS ADVANCE TO EXIT

Adjustments Screen Showing Factory Settings

Exclusive Game Adjustments

1. Inside the coin door is a bracket with three button switches. Set the AUTO-UP/MANUAL-DOWN (center) switch to AUTO-UP.

2. Press the ADVANCE switch twice. The GAME ADJUSTMENTS screen will come up.

3. Use PLAYER 2 START to move down to the desired adjustment.

4. Use PLAYER 1 START to move up.

5. Use GOBBLE (raise value or yes) or GRENADE (reduce value or no) to alter the value of an adjustment.

Now for the multiple-choice section! Choose one or more:

//Use GOBBLE or GRENADE to choose the appropriate difficulty level (0 = easiest or extra liberal, 5 = average, 9 = hardest or extra conservative).

//SELECT GAME PRICING with standard or custom settings. See the Pricing Table later in this chapter.

Pricing Table

Coin-Door Mechanism	Games/Price	Pricing Selection	Left Slot Units	Center Slot Units	Right Slot Units	Units Req'd For Credit	Units Req'd For Bonus Credit	Min. Units For Any Credit
Twin Quarter	•1/25¢, 4/$1	3	1	4	1	1	0	0
Quarter,	1/25¢, 5/$1	0	1	4	1	1	4	0
Dollar,	2/50¢, 4/$1	0	1	4	1	1	0	2
Quarter	2/50¢, 5/$1	0	1	4	1	1	4	2
	•1/50¢, 2/$1	5	1	4	1	2	0	0
	1/50¢, 3/$1, 4/$1.25	0	3	12	3	4	15	0
	1/$1	0	1	4	1	4	0	0
	1/50¢, 3/$1, 7/$2	0	12	48	12	14	96	24
1DM, 5DM	2/1DM, 12/5DM	0	12	0	2	2	0	0
	•1/1DM, 6/5DM	2	6	0	1	1	0	0
1 Franc, 5 Franc	•1/2F, 3/5F only	4	1	16	6	2	0	0
25-Cent, 1 Guilder	•1/25¢, 4/1G	6	1	0	4	1	0	0
	1/25¢, 5/1G	0	1	0	4	1	4	0
5 Franc, 10 Franc	•1/5F, 2/10F	7	1	0	2	1	0	0
	•1/10F	8	1	0	2	2	0	0
1 Franc, 2 Franc	•2/1F, 5/2F	2	6	0	1	1	0	0
100 Lire, 200 Lire	•1/200 Lire	8	1	0	2	2	0	0
Twin Coin	•1/1 Coin	3	1	4	1	1	0	0
	•1/2 Coins	5	1	4	1	2	0	0
	1/4 Coins	0	1	4	1	4	0	0
	1/2 Coins, 3/4 Coins	1	1	4	1	2	4	0
	1/3 Coins, 2/5 Coins	0	2	0	2	5	0	0
	•1/2, 3/5	4	1	16	6	2	0	0
1-Unit,	1/1, 5/5	0	1	0	5	1	0	0
5-Unit	1/3, 2/5	0	2	0	10	5	0	0
Any	•Free Play	9	1	4	1	1	0	0

Game Pricing

PRICING SELECTION allows a shorthand method of setting the pricing functions. If a number from one to nine is entered into the PRICING SELECTION function, a corresponding standard setting (shown in the pricing table above) will be entered into the game. The rest of the pricing functions are automatically set for that standard.

FOR CUSTOM SETTINGS first set PRICING SELECTION to zero. Then set the remaining values according to the Pricing Table.

THE GAMES : PRICE RATIO is equivalent to the ratio X : VC
where:
X = SLOT UNITS
V = COIN VALUE
C = UNITS REQUIRED FOR CREDIT

For example at factory settings with quarter chutes the variables produce 1 : 25x2 or one game for two quarters.

Diagnostic-Mode Tests

SET THE AUTO-UP/MANUAL-DOWN SWITCH to the MANUAL-DOWN position and press ADVANCE. The game is now in its Diagnostic Mode and a ROM test is performed. With ROM test results present on the CRT display, set the AUTO-UP/MANUAL-DOWN switch to the AUTO-UP position. Enter subsequent tests by pressing ADVANCE once more for each test. After the last test, Game-Over Mode commences.

AUTO-CYCLE MODE permits continuous ROM, RAM and CMOS RAM tests to detect failures that only appear after numerous checksum comparisons. If an error is detected Auto-Cycle Mode is aborted and a failure message is displayed on the CRT.

1. Open the coin door. It must remain open for AUTO CYCLE.
2. Display GAME ADJUSTMENTS.
3. Move down to AUTO CYCLE.
4. Display YES.
5. Press ADVANCE.
6. To enter Game-Over Mode turn the game off and on.

Built-In Test Procedures

POWER-UP TESTS

RAM TEST. A rug pattern scans across the screen. Only screen RAMS (dynamic type) are tested. A bad RAM is indicated on the CPU-board LED-indicator by an error code between 100 and 199 (eg., 1-3-1; see the table of Screen-RAM Error Codes below). If a RAM error is indicated, check all three DC power-voltages on the RAM indicated: -5/pin 1, +12/pin 8, +5/pin 9. None of these should have more than a few millivolts of AC on it. Never replace a RAM chip until you prove that these voltages are normal!

Screen-RAM Error Codes

CHIP	98	99	100	101	102	103	104	105
CODE	115	116	117	118	111	112	113	114
CHIP	106	107	108	109	110	111	112	113
CODE	125	126	127	128	121	122	123	124
CHIP	114	115	116	117	118	119	120	121
CODE	135	136	137	138	131	132	133	134

ROM TEST. A bad ROM is indicated on the CPU-board LED-indicator by an error code between 200 and 299 (eg., 2-1-1; see the ROM Summary for codes). An error message may also appear on the CRT. Power down and replace bad chips.

CMOS-DATA TEST. Checksums are compared. If the CMOS RAM fails the test, FACTORY SETTINGS RESTORED appears on the CRT.

DIAGNOSTIC-MODE TESTS

RAM AND ROM TESTS... These tests are repeated, only the ROM test is performed first. Refer to RAM Test and ROM Test above.

CMOS-RAM TEST. A chip error is displayed on the CRT and the LED readout on the CPU board. If the CMOS RAM is bad, the error code 3 will appear on the LED readout.

SOUND, COIL AND LAMP TEST. Sound-lines 1 through 6 are tested. In addition, the grenade and gun lamps, feather and gun coils are checked. One by one, sound lines, lamps or coils are pulsed. When a sound line is pulsed, its number is shown on the CRT. You should hear a separate sound for each sound line. If a sound is missing, its corresponding line is stuck high (that is, open) or stuck low (that is, shorted to ground). If two lines produce the same sound, they're shorted together. Use AUTO-UP to cycle through all the sounds, coils and lamps. With MANUAL-DOWN, you'll continuously test one sound-line, lamp or coil.

SWITCH TEST. The name of the switch is highlighted when that switch is closed. Opto switches (used to determine gun position) are tested in a special way: Watch the graph on the left side and bottom of the switch-test screen as you move the gun. The graph should change color ("move") smoothly. If the graph appears to "jump," adjust the optos for smooth movement. To exit the switch test you must hold ADVANCE down until the next screen appears.

THE CROSSHATCH PATTERN aids the technician in converging the monitor.

THE PURITY SCREENS (solid red, green and blue screens) are intended for monitor adjustments and for checking the color RAMs. If these screens show contaminated colors, degauss the screen and adjust the purity magnets. If colors are missing, one of your color RAMs may be bad. A purity screen with vertical lines through it also signals a color-RAM error. (Please don't confuse the purity screens with the crosshatch pattern or color bars pattern. These test patterns are supposed to have vertical lines!)

THE COLOR BARS are intended for monitor adjustments and for checking the color RAMS. The bars serve as a color and brightness reference when you adjust the color drives and cutoffs, screen and black-level controls. If colors are missing or the wrong colors are displayed, you may have a bad color RAM. From the left side of the CRT, here are the colors you should see: red, green, blue, black, white, yellow, cyan and magenta.

Sound Self-Test

1. NO SOUND IN DIAGNOSTIC-MODE TEST: Check the sound-select inputs (pins 2 through 9 of IC 4) on the CPU board for pulsing during the test. Also check for shorts between sound lines.

2. STILL NO SOUND: Turn the volume control all the way up. With the game turned on, momentarily place a powered-up AC soldering-pencil on the center tap of the volume control. DO NOT use a soldering iron of over 40 watts. Cordless models will NOT work here.

   (A) If you hear a low hum, the power-amplifier chip (TDA2002A), volume control and speaker are okay.

   (B) If you don't hear a hum, try the test again with the volume control turned halfway up.

3. GARBLED SOUNDS: One at a time, replace microprocessor IC27 and Sound Rom IC8 on the CPU board.

4. THE SOUND DIAGNOSTIC BUTTON on the CPU board isn't used in this game. If you accidentally press this button, game sounds will be disabled until you turn the game off and on again.

TURKEY SHOOT Circuitboards & Gun Mechanism

PART NO.	DESCRIPTION
C-10525	opto PC-board
C-8809	heatsink assembly
D-9444 or D-8784	power-supply PC-board
D-9868	video PC-board
D-9886	power-transformer chassis
D-10395	CPU PC-board
D-10413	interface PC-board
D-10289	gun-mechanism
SFL-24-750-DC	gun coil-assembly
SFL-25-750-DC	feather-dispenser coil

Warnings & Notices

WARNING

FOR SAFETY AND RELIABILITY, WILLIAMS does not recommend or authorize any substitute parts or modifications of WILLIAMS equipment.

USE OF NON-WILLIAMS PARTS and modifications of game circuitry may adversely affect game play, or may cause injuries.

SUBSTITUTE PARTS OR EQUIPMENT MODIFICATIONS may void FCC type-acceptance.

SINCE THIS GAME IS PROTECTED by Federal copyright, trademark and patent laws, unauthorized game-conversions may be illegal under Federal law.

THIS "CONVERSION" PRINCIPLE ALSO APPLIES to unauthorized facsimiles of WILLIAMS equipment, logos, designs, publications, assemblies and games (or game features not deemed to be in the public domain), whether manufactured with WILLIAMS components or not.

WARNING

This equipment generates, uses, and can radiate radio frequency energy and if not installed and used in accordance with the instructions manual, may cause interference to radio communications. It has been tested and found to comply with the limits for a Class A computing device pursuant to Subpart J of Part 15 of FCC Rules, which are designed to provide reasonable protection against such interference when operated in a commercial environment. Operation of this equipment in a residential area is likely to cause interference in which case the user at his own expense will be required to correct the interference.

RF-INTERFERENCE NOTICE

CABLE PLACEMENT and ground-strap routing on this game have been designed to keep RF radiation and conduction within levels accepted by FCC regulations.

TO MAINTAIN THESE LEVELS, reposition harnesses and reconnect ground straps to their original placements if they should be disconnected during maintenance.

"TURKEY SHOOT" is a trademark of Williams Electronics, Inc.

©1984 Williams Electronics, Inc.

TURKEY SHOOT GUN ASS'Y. (D-10302)

ITEM	PART NO.	DESCRIPTION	QTY.
1	03-7890	GUN, MOLDED	1
2	B-10293	GUN SHAFT ASS'Y	1
3	03-7891-24	GUN NOZZLE	1
4	C-10423-3025-1	3025 BTN ASSY GRND	1
5	4106-01099-16B	S.T.S. #6 TORX (T-15) TRX-PH	2
6	4106-01099-18B	S.T.S. #6 TORX (T-15) TRX-PH	5
7	4106-01099-06B	S.T.S. #6 TORX (T-15) TRX-PH	1
8	4106-01099-26B	S.T.S. #6 TORX (T-15) TRX-PH	2
9	03-7786	P/GRIP TRIGGER	1
10	01-7994	T/S TRIG. SPRING	1
11	5647-10163-00	TRIGGER SWITCH	1
12	H-10328	GUN CABLE	1
13	4106-01009-06	SMS #6 x 3/8 P.PH P	4
14	A-10512	SKT. & BULB #1866 ASSY.	1
15	A-10441	COIL BRKT SUB-ASSY	1
16	01-7991	T/S COIL RET BRKT	1
17	02-4211	T/S KICKER PLUNGER	1
18	10-257	SPRING-CREDIT BTN	1
19	SFL-24/750-DC	3025 GUN COIL ASSY	1
20	23-6557-9	NEOPRENE GASKET	2
21	5791-09138-00	9P1625 03-06-2092	1
22	RM-23-01	H.S. TUBING 1/8 POLY	1

9-PIN MALE CONNECTOR

PIN	COLOR		FUNCTION
1	ORG-BLK	22	SW. GND
2	ORG-BRN	22	TRIGGER SW.
3	ORG-RED	22	GRENADE SW.
4	BLK-RED	22	LAMP COMMON 6V D.C.
5	BLK-RED	22	TRIGGER LAMP ON-OFF
6	BLK-ORG	22	GRENADE LAMP ON-OFF
7	BLK-YEL	18	TRIGGER SOLENOID ON-OFF
8	BLK-BLU	18	SOLENOID COMMON (+12V D.C.)
9	NOT USED		

WHITE HOUSING 5791-09138-00 (REF.). Install item 21 after wires are installed in gun shaft.

FEATHER CHAMBER ASSY. (D-10344)

ITEM	PART NO.	DESCRIPTION	QTY.
1	11-768	FTR DEVICE FRAME	1
2	01-7906	F/D GLASS CLAMP	2
3	4206-01016-08	WS #6 x 1/2 P-RH	4
4	03-7902	FTR DEVICE SCREEN	1
5	4208-01041-10	WS #8 x 1/2 P-FH	6
6	01-7927	FEATHER GUIDE	2
7	01-7979	F/D FLOW DIVIDER	1
8	31-1228-3025-U	3025 F/D COVER	1
9	08-7424	FTR DEVICE GLASS	1
10	20-9435	FEATHERS	80
11	23-6573-4	NEOPRN GSKT 17"	2

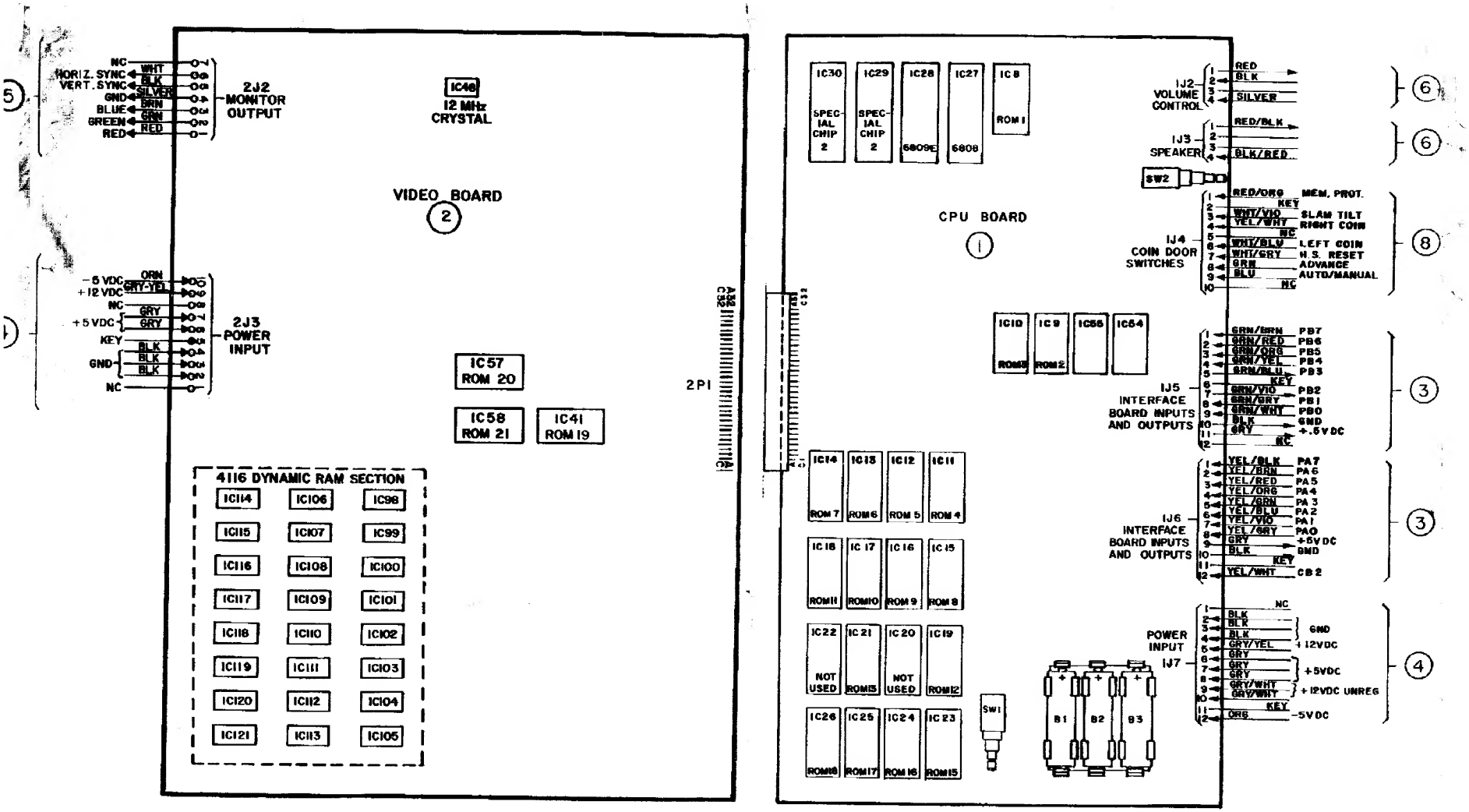

CONNECTOR KEY

1	CPU BOARD	7	CONTROL PANEL
2	VIDEO BOARD	8	COIN DOOR
3	INTERFACE BOARD	9	CASH BOX
4	POWER SUPPLY	10	VERTICAL OPTO-BOARD
5	MONITOR	11	HORIZONTAL OPTO-BOARD
6	CABINET	12	GUN

Circuitboards & Gun Mechanism

PART NO.	DESCRIPTION
C-10544	apto PC-board subassembly
C-8809	heatsink assembly
D-9444 or D-8784	power-supply PC-board
D-9868	video PC-board
D-9886	power-transformer chassis
D-10395	CPU PC-board
D-10413	interface PC-board
D-10289	gun mechanism
SFL-24-750-DC	gun coil-assembly
SFL-25-750-DC	feather-dispenser coil

HANGE	ECN NO. DATE
EASE	12886 7-26-84

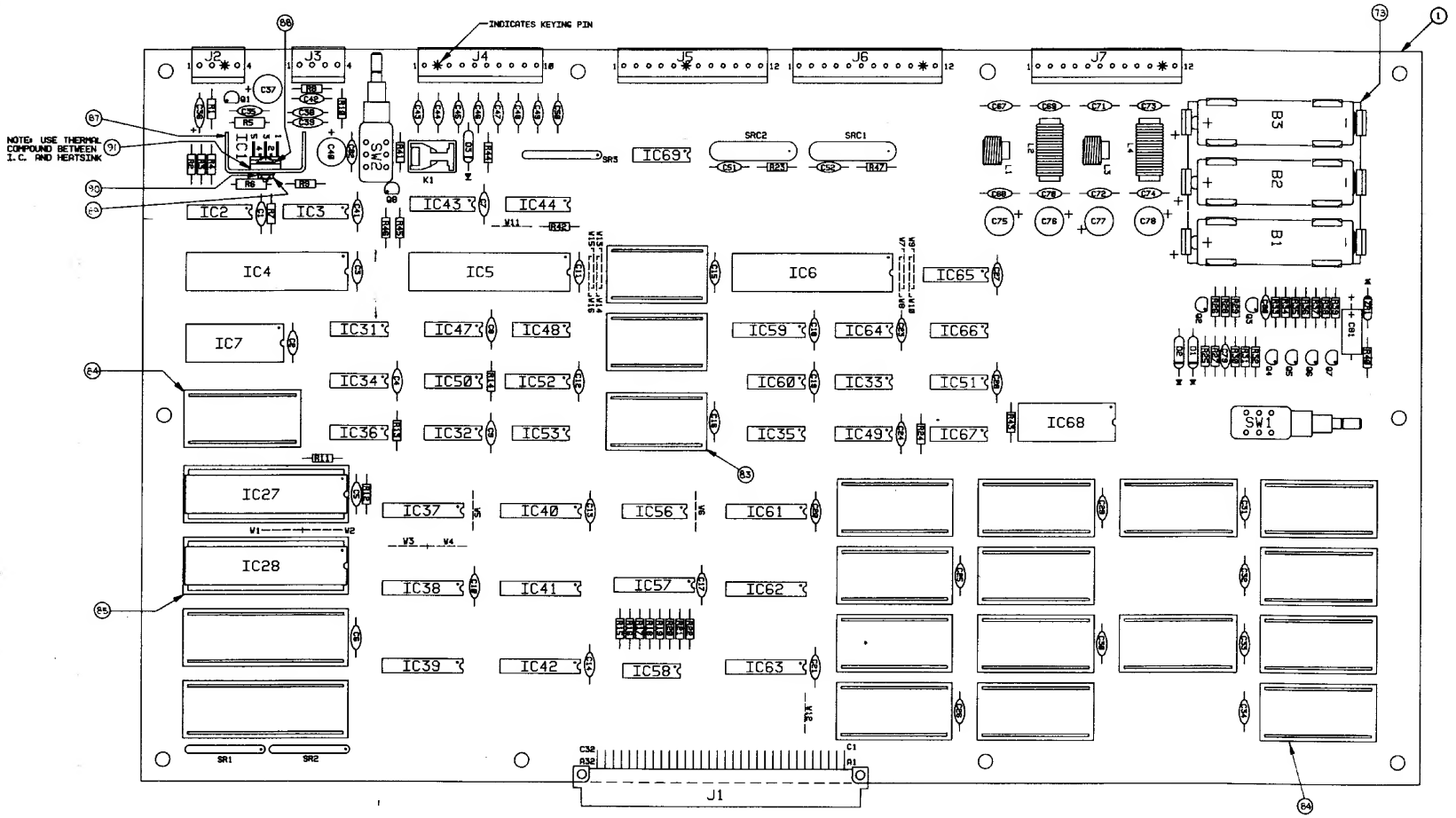

TURKEY SHOOT

ITEM	PART NUMBER	DESCRIPTION	QTY	ITEM	PART NUMBER	DESCRIPTION	QTY

PROJ. ENGR S.C. HERSCHLER	DO NOT SCALE WORK TO DIMENSIONS SHOWN	REMOVE BURRS – BREAK SHARP EDGES	WILLIAMS ELECTRONICS, INC. 3401 N. CALIFORNIA AVE. CHICAGO IL. 60618
DWN. BY RGH DATE 4-16-84		TOLERANCES UNLESS OTHERWISE SPECIFIED FRACTIONAL ±1/64 ANGULAR ±1° DECIMAL ±.005 FILLETS .020 MAX	NAME CPU PC BOARD SUB-ASSEM.
CHECKED BY DATE 4/26/84	FIRST PROJECT NO 3025	MATERIAL	
APPROVAL DATE 4-21-84	FIRST USAGE D-10395 QTY 1		SCALE 1 3/8/1 SHT 1 OF 2 PART NO. D-10394 REV

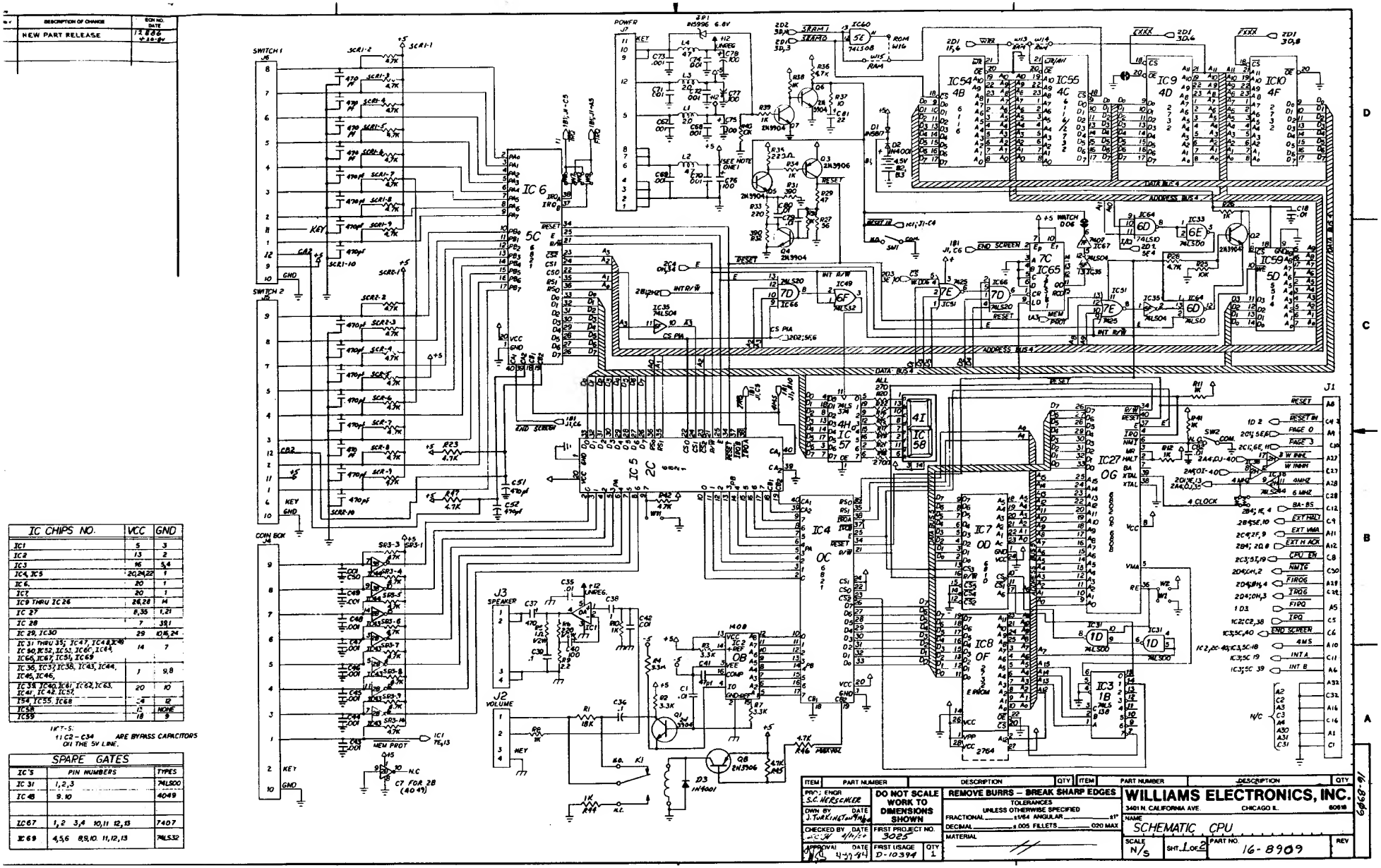

IC CHIPS NO.	VCC	GND
IC1	5	3
IC2	13	2
IC3	16	5,4
IC4, IC5	20,24,22	1
IC6,	20	1
IC7	20	1
IC9 THRU IC26	28,28	14
IC 27	8,35	1,21
IC 28	7	39,1
IC 29, IC30	29	10,15,24
IC 31 THRU 35; IC47, IC48, IC49, IC50, IC52, IC53, IC56, IC64, IC66, IC67, IC51, IC69	14	7
IC 36, IC37, IC38, IC45, IC44, IC45, IC46,	1	9,8
IC 39, IC40, IC41, IC62, IC63, IC 61, IC 42, IC 58	20	10
IC54, IC55, IC68	24	12
IC58	15	NONE
IC59	18	9

IC7-5:
11 C2 - C34 ARE BYPASS CAPACITORS ON THE 5V LINE.

SPARE GATES		
IC'S	PIN NUMBERS	TYPES
IC 31	1,2,3	74LS00
IC 48	9.10	4049
IC67	1,2 3,4 10,11 12,13	7407
IC 69	4,5,6 8,9,10. 11,12,13	74LS32

ITEM	PART NUMBER	DESCRIPTION	QTY
PROJ: ENGR S.C. HERSCHLER	DO NOT SCALE WORK TO DIMENSIONS SHOWN	REMOVE BURRS – BREAK SHARP EDGES	
DWN BY J. TURK 4/6/84	FIRST PROJECT NO. 3025	TOLERANCES UNLESS OTHERWISE SPECIFIED FRACTIONAL ±1/64 ANGULAR ±1° DECIMAL .XX ±.005 FILLETS .020 MAX	
CHECKED BY DATE	FIRST LISAGE D-10394	MATERIAL	QTY 1
APPROVAL DATE 4-30-84			

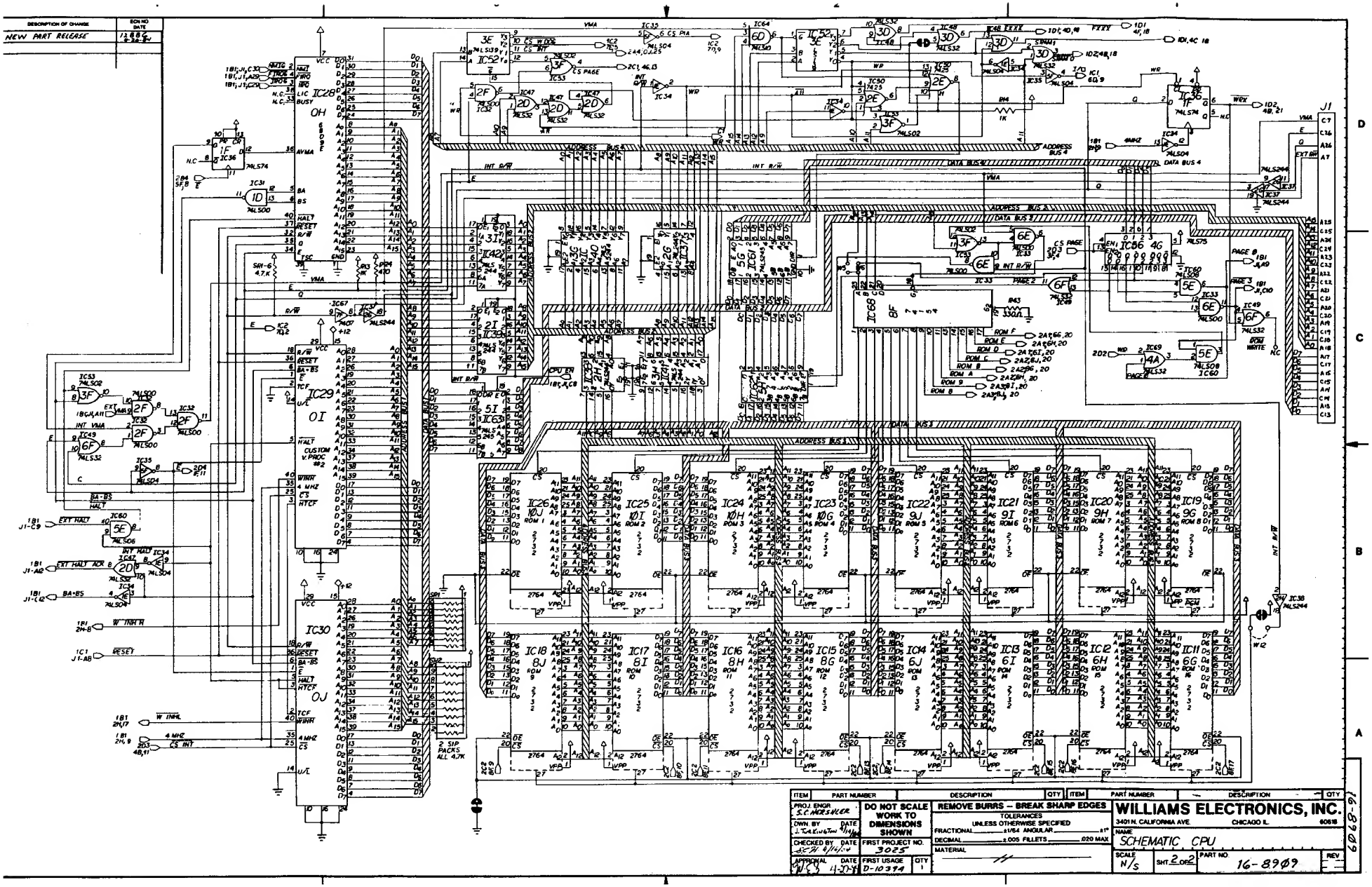

ITEM	PART NUMBER	DESCRIPTION	QTY	ITEM	PART NUMBER	DESCRIPTION	QTY

PROJ. ENGR. S.C. HERSHLER

DWN. BY J. TURKINGTON DATE 4/14/84

CHECKED BY SCH DATE 4/16/84

APPROVAL WES DATE 4-20-84

DO NOT SCALE WORK TO DIMENSIONS SHOWN

FIRST PROJECT NO. 3025

FIRST USAGE D-10394 QTY 1

REMOVE BURRS – BREAK SHARP EDGES

TOLERANCES UNLESS OTHERWISE SPECIFIED

FRACTIONAL ±1/64 ANGULAR ±1°

DECIMAL ±.005 FILLETS .020 MAX

MATERIAL

WILLIAMS ELECTRONICS, INC.

3401 N. CALIFORNIA AVE. CHICAGO IL. 60618

NAME SCHEMATIC CPU

SCALE N/S SHT 2 OF 2 PART NO. 16-8909 REV

6068-91

REV	DESCRIPTION OF CHANGE	ECN NO DATE
	NEW PART RELEASE	12691 5-19-83
A	ITEMS & PART DESIGNATION ICI7 WERE 5V7	12890 6-20-83

NOTES:

1. FOR SCHEMATIC, REFER TO DWG. #16-8874
2. I.C., 74LS86: IC5, IC26, IC27, IC28, IC29, IC33, IC84.
3. I.C., 74LS74: IC6, IC12, IC25, IC50, IC52, IC53.
4. I.C., 74LS374: IC11, IC15, IC38, IC39, IC55, IC56, IC78, IC86, IC88, IC89, IC90.
5. I.C., 74LS157: IC21, IC22, IC23, IC80, IC79 IC81, IC82.
6. I.C., 74LS161: IC31, IC43, IC44, IC45, IC46.
7. I.C., 74198: IC73, IC74, IC94, IC95, IC96, IC97.
8. I.C., 4116: IC98, IC99, IC100, IC101, IC102, IC103, IC104, IC105, IC106, IC107, IC108, IC109, IC110, IC111, IC112, IC113, IC114, IC115, IC116, IC117, IC118, IC119, IC120, IC121.
9. RESISTOR, 1K OHM: R1, R2, R3, R4, R5, R32, R33, R37, R38.
10. RESISTOR, 2K OHM: R8, R12, R16, R20, R28, R29, R30, R40, R41, R42.
11. CAPACITOR, .01 MFD: C1, C2, C3, C4, C5, C6, C7, C8, C9, C10, C11, C12, C13, C14, C15, C16, C17, C18, C19, C20, C21, C22, C23, C24, C25, C26, C27, C28, C29, C30, C31, C32, C33, C34, C35, C36, C37, C38, C39, C40, C41, C42, C43, C44, C45, C46, C47, C48, C49, C50, C63, C67, C71, C75, C74, C75, C76, C77, C78, C79, C80, C81, C82, C83, C84, C85, C86, C87, C88, C89, C90, C91, C92, C93, C94, C95, C96, C97, C98, C99, C100, C101, C102, C103, C104, C105, C106, C107, C108.
12. CAPACITOR, .001 MFD: C62, C64, C66, C68, C70, C72.
13. DIODE, 1N4148: D1, D2, D3, D4, D5, D6, D7, D8, D9, D10, D11, D12, D13, D14, D15, D16, D17, D18, D19.

ITEM	PART NO.	PART DESIGNATION	DESCRIPTION	QTY.
87				
86				
85				
84				
83				
82				
81				
80				
79				
78				
77				
76				
75				
74				
73	5700-10176-00		28 PIN I.C. SOCKET	3
72	5700-09006-00		16 PIN I.C. SOCKET	24
71				
70				
69	5791-09444-00	J3	10 PIN HEADER 89-65-1101	1
68	5791-09497-00	J2	7 PIN HEADER 89-65-1071	1
67	5792-10026-00	J1	64 PIN R.N. HEADER FEMALE	1
66				
65				
64	5551-09022-00	L4	COIL, RADIAL, 4.7 UH 3 A.	1
63	5551-10161-00	L2, L3	COIL, RADIAL, 2.0 UH 3 A.	2
62	5551-09025-00	L1	COIL, RADIAL, 4.7 UH 30 MA	1
61				
60				
59	5070-08919-00	SEE NOTE #13	DIODE, IN4148 150 MA	19
58				

ITEM	PART NO.	PART DESIGNATION	DESCRIPTION	QTY.
57	5160-10269-00	Q1, Q2, Q3, Q4, Q5	TRANSISTOR, 2N3904 NPN TO-92	5
56				
55				
54	5043-09845-00	C62, C64, C66, C68, C70, C72	CAPACITOR, AXIAL, .001 MFD. 50V +/-20%	6
53	5040-09421-00	C61 C65, C69	CAPACITOR, RADIAL, 100 MFD. 25V +50-10%	3
52	5043-08996-00	C60	CAPACITOR, CERAMIC, .1 MFD. 50V +/-20%	1
51	5043-09844-00	C54, C55 C56, C57	CAPACITOR, CERAMIC, 47 PFD. 50V +/-20%	4
50	5043-09065-00	C51, C52, C53	CAPACITOR, CERAMIC, 470 PFD. 50V +/-20%	3
49	5043-08980-00	SEE NOTE #11	CAPACITOR, CERAMIC, .01 MFD. 50V +80-20%	89
48				
47	5019-09669-00	SR1	RESISTOR, C.F., 1K OHM 5% 10 PIN SIP	1
46				
45	5010-09534-00	W2, W4, W5, W6	RESISTOR, 0 OHM	4
44	5010-09541-00	R36	RESISTOR, C.F., 2.7K OHM 2% 1/4 WATT	1
43	5010-10203-00	R35	RESISTOR, C.F., 2.2K OHM 2% 1/4 WATT	1
42	5010-10003-00	R34, R39	RESISTOR, C.F., 390 OHM 5% 1/4 WATT	2
41	5010-10170-00	R23, R25, R29	RESISTOR, C.F., 47 OHM 5% 1/4 WATT	3
40	5010-09508-00	R31	RESISTOR, C.F., 270 OHM 2% 1/4 WATT	1
39	5010-09416-00	R22, R24, R26	RESISTOR, C.F., 470 OHM 5% 1/4 WATT	3
38	5010-10284-00	R9, R13, R17, R21	RESISTOR, C.F., 1K OHM 2% 1/4 WATT	4
37	5010-10285-00	SEE NOTE #10	RESISTOR, C.F., 2K OHM 2% 1/4 WATT	10
36	5010-10000-00	R7, R11, R15, R19	RESISTOR, C.F., 3.9K OHM 5% 1/4 WATT	4
35	5010-09219-00	R6, R10, R14, R18	RESISTOR, C.F., 8.2K OHM 5% 1/4 WATT	4
34	5010-09358-00	SEE NOTE #9	RESISTOR, C.F., 1K OHM 5% 1/4 WATT	9
33				
32				
31	5340-09488-00	SEE NOTE #8	I.C., 4116 RAM/D 16K X 1, 450 NS	24
30				
29	5340-10019-00	IC75, IC76, IC77, IC78	I.C., 2149 RAM/S 1K X 4, 70 NS	8
	5340-10018-00		I.C., 2148 RAM/S 1K X 4, 70 NS	4

ITEM	PART NO.	PART DESIGNATION	DESCRIPTION	QTY.
28	5200-10017-00	SEE NOTE #7	I.C., 74198, 8 BIT SHIFT REGISTER	6
27	5201-09739-00	IC71, IC72, IC83	I.C., 74LS158, QUAD 2 TO 1 MULTIPLEXER	3
26	5200-09481-00	IC61, IC62, IC63, IC64	I.C., 74153, DUAL 4 TO 1 MULTIPLEXER	4
25	A-5282-10293	IC60	I.C., HORZ. DECODE ROM SB	8
	A-5282-10292		I.C., HORZ. DECODE ROM SA	1
24	5201-09308-00	IC54, IC85, IC87	I.C., 74LS245, OCTAL BUS TRANSCEIVER	3
23	5521-10028-00	IC48	I.C., K1116, 12 MHZ OSC 1%	1
22	A-5282-10294	IC47	I.C., HORZ. SYNC. ROM	1
21	5340-10139-00	IC40	I.C., TC5516AP-2 CMOS 5 RAM 2K X 8 200 NS	8
	5340-09078-00		I.C., 2016 5 RAM 2K X 8 200 NS	1
20	5201-09745-00	IC37	I.C., 74LS138, 3 TO 8 DECODER	1
19	5201-09246-00	IC36, IC59	I.C., 74LS139, DUAL 2 TO 4 DEC.	2
18	5201-10014-00	IC34, IC51, IC68	I.C., 74LS20, DUAL 4-INPUT NAND	3
17	5201-09735-00	SEE NOTE #6	I.C., 74LS161, BINARY COUNTER	5
16	5201-09235-00	IC30, IC32, IC35	I.C., 74LS10, TRIPLE 3-INPUT NAND	3
15	5201-09758-00	SEE NOTE #5	I.C., 74LS157, QUAD 2 TO 1 MULTIPLEXER	7
14	5201-09734-00	IC19, IC20	I.C., 74LS283, 4 BIT ADDER	2
13	A-5282-10295	IC14	I.C., CLOCK ROM	1
12	5201-09867-00	IC13, IC24	I.C., 74LS244, OCTAL BUF	2
11	5201-09486-00	SEE NOTE #4	I.C., 74LS374, OCTAL D F/F	11
10	5201-09856-00	IC10, IC91, IC92, IC93	I.C., 74LS373, OCTAL D LATCH	4
9	5201-09247-00	IC9, IC16	I.C., 74LS02, QUAD 2-INPUT NOR	2
8	5201-09499-00	IC8, IC65	I.C., 74LS00, QUAD 2-INPUT NAND	2
7	5201-09487-00	SEE NOTE #3	I.C., 74LS74, DUAL D F/F	6
6	5200-09551-00	IC5	I.C., 7425, DUAL 4-INPUT W/STROBE NOR	1
5	5201-09743-00	IC4, IC7, IC49	I.C., 74LS08, QUAD 2-INPUT AND	3
4	5201-09737-00	SEE NOTE #2	I.C., 74LS86, QUAD 2-INPUT EXOR	7
3 (A)	5201-09508-00	IC2, IC12, IC42, IC66, IC67	I.C., 74LS32, QUAD 2-INPUT OR	5
2	5201-09215-00	IC1, IC18, IC69	I.C., 74LS04, HEX. INVERTER	3
1	5780-10333-00		BARE P.C. BOARD (REV. -)	1

BILL OF MATERIALS

PROJ ENGR S. HERSCHLER	DO NOT SCALE WORK TO DIMENSIONS SHOWN	REMOVE BURRS — BREAK SHARP EDGES	WILLIAMS ELECTRONICS, INC.
DWN BY R. GAY 5/20/83		TOLERANCES UNLESS OTHERWISE SPECIFIED	3401 N CALIFORNIA AVE CHICAGO IL 60618
CHECKED BY J.C.H. 9/14/83	FIRST PROJECT NO. 3025	FRACTIONAL ±1/64 ANGULAR ±1° DECIMAL ±.005 FILLETS .020 MAX	NAME VIDEO P.C. BOARD SUB-ASSEMBLY
APPROVAL J.C.H. 9/13/83 DATE	FIRST USAGE D-9868 QTY 1	MATERIAL NONE	SCALE 1.25/1 SHT 2 OF 2 PART NO D-9867 REV A

D-9867-B

REV	DESCRIPTION OF CHANGE	ECN NO DATE
	NEW PART RELEASE	12,647 9/12/84
A	SEE SHEET 2 OF 2 SMK	12,890 4-26-84

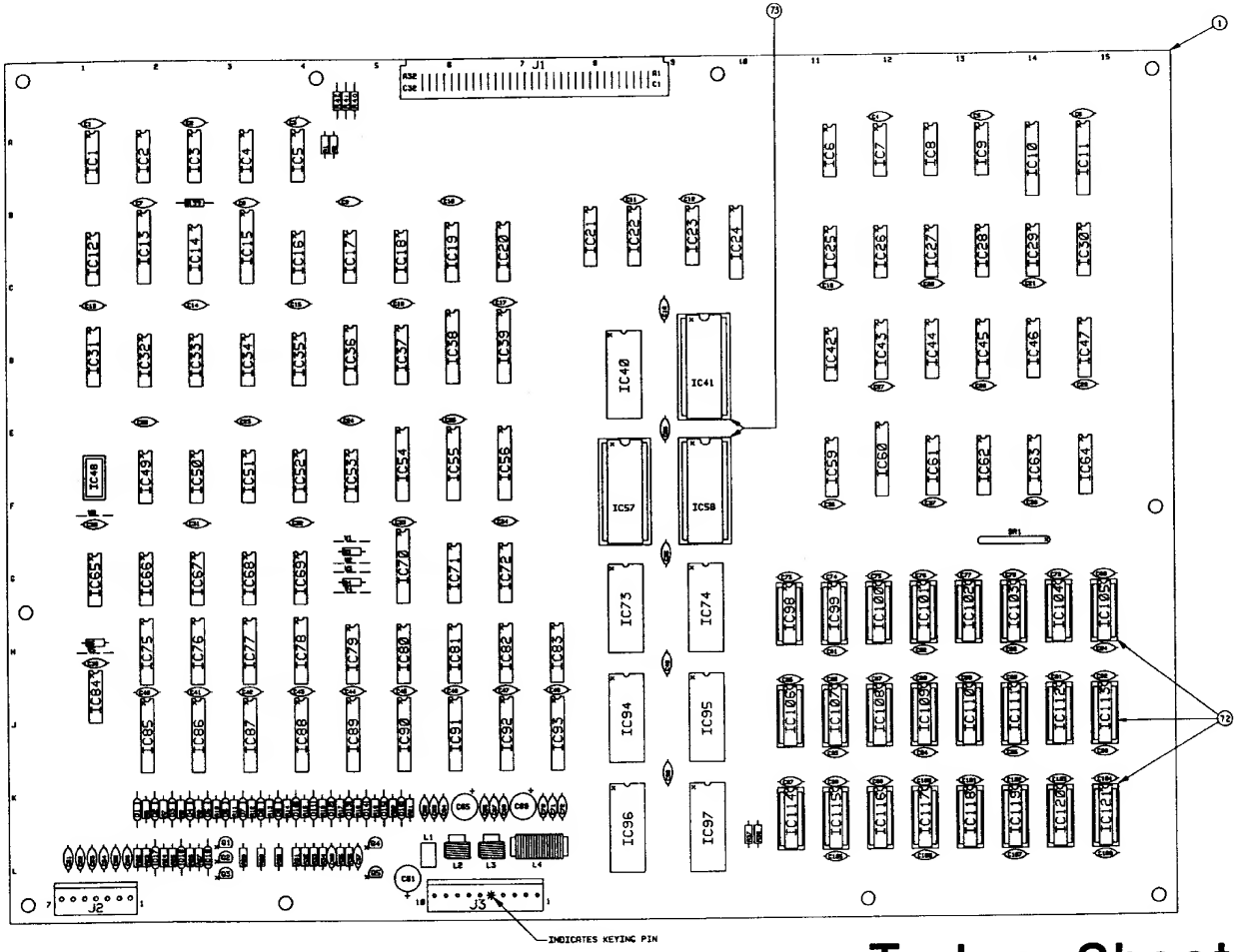

Turkey Shoot

ITEM	PART NUMBER	DESCRIPTION	QTY	ITEM	PART NUMBER	DESCRIPTION	QTY

PROJ ENGR: S. MERSCHLER
DWN BY: H.C. DATE: 8-8-84
CHECKED BY: DATE: 9/11/84
APPROVAL: DATE: 9/14/84

DO NOT SCALE WORK TO DIMENSIONS SHOWN

FIRST PROJECT NO: 3085
FIRST USAGE: D-9868
QTY: 1

REMOVE BURRS – BREAK SHARP EDGES

TOLERANCES UNLESS OTHERWISE SPECIFIED
FRACTIONAL ±1/64 ANGULAR ±1°
DECIMAL .XX ±.005 FILLETS .020 MAX

MATERIAL

WILLIAMS ELECTRONICS, INC.
3401 N. CALIFORNIA AVE CHICAGO IL 60618

NAME: VIDEO PC BOARD SUB-ASSEMBLY

SCALE: 1/1 SHT 1 OF 2 PART NO: D-9867 REV: A

D-9867

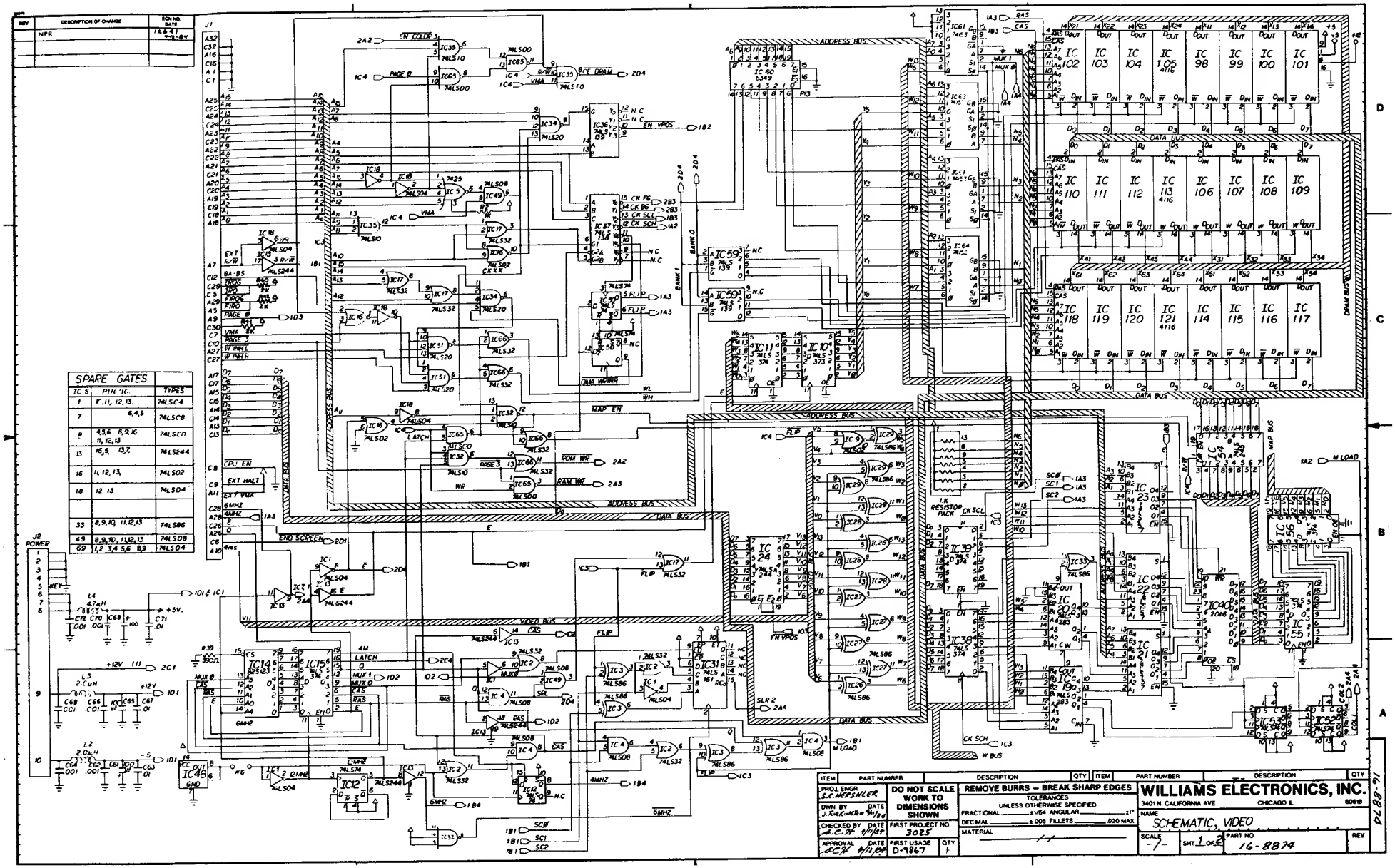

SPARE GATES		
IC'S	PIN 'IC'	TYPES
1	1C, 11, 12, 13.	74LSC4
7	6, 4, 5	74LSC8
8	4,5,6 6,9,10 11, 12, 13	74LSC0
13	16,5, 13,7,	74LS244
16	11, 12, 13,	74LS02
18	12 13	74LS04
33	8,9,10, 11,12,13	74LS86
49	8,9,10, 11,12,13	74LS08
69	1,2 3,4 5,6 8,9	74LS04

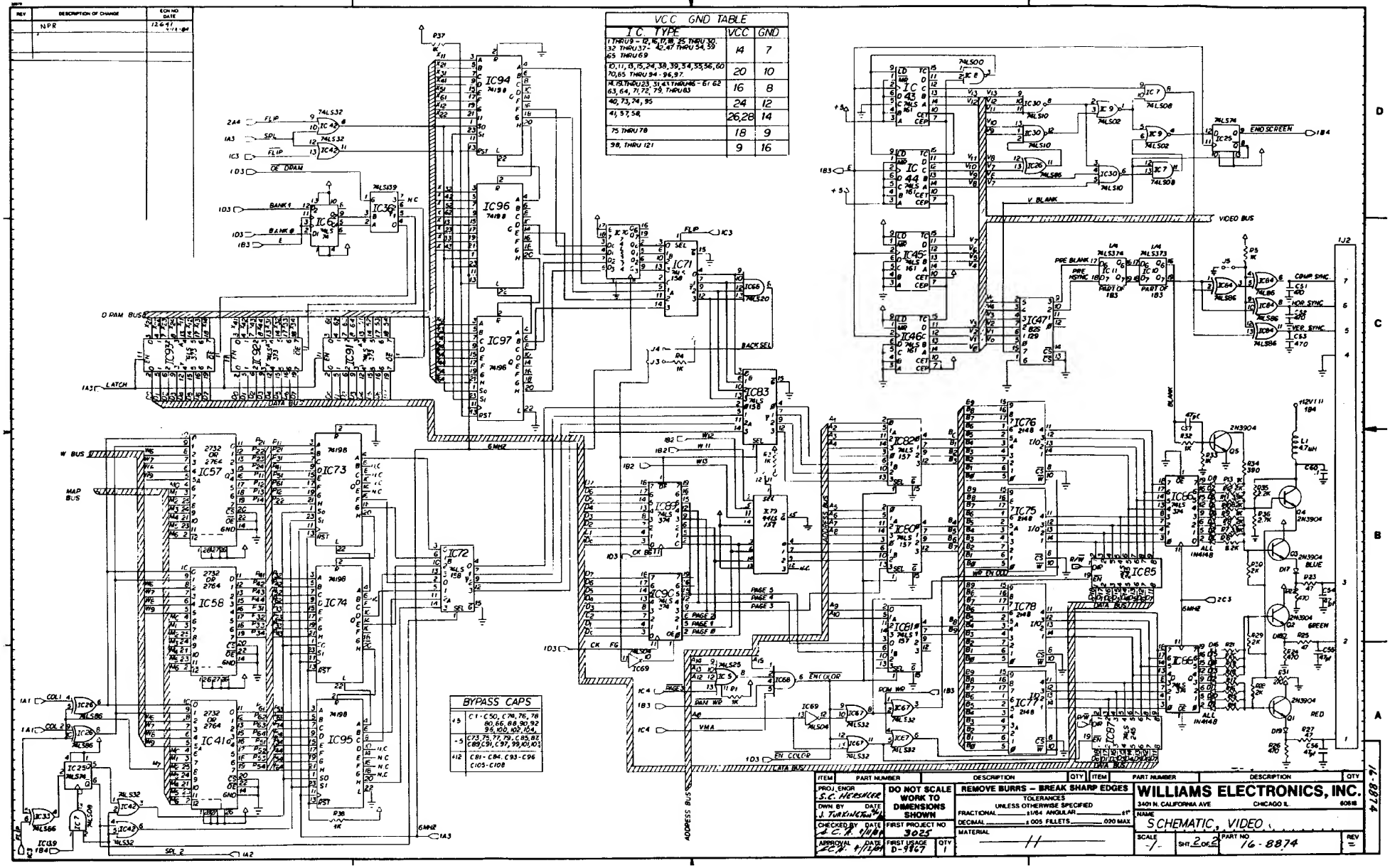
VCC GND TABLE
IC TYPE | VCC | GND
1 THRU 9 - 12, 16, 17, 18, 25 THRU 30, 32 THRU 37 - 42, 47 THRU 54, 59 65 THRU 69 | 14 | 7
10, 11, 13, 15, 24, 38, 39, 54, 55, 56, 60 70, 85 THRU 94 - 96, 97 | 20 | 10
14, 15, THRU 23, 31, 43 THRU 46 - 61 62 63, 64, 71, 72, 79, THRU 83 | 16 | 8
40, 73, 74, 95 | 24 | 12
41, 57, 58, | 26, 28 | 14
75 THRU 78 | 18 | 9
98, THRU 121 | 9 | 16
BYPASS CAPS
+5 | C1 - C50, C76, 76, 78 80, 86, 88, 90, 92 96, 100, 102, 104
-5 | C73, 75, 77, 79, C85, 87 C89, C91, C97, 99, 101, 103
+12 | C81 - C84, C93 - C96 C105 - C108
REV | DESCRIPTION OF CHANGE | ECN NO DATE
NPR | 12641 7/18/84
IC94 74198
IC96 74198
IC97 74196
IC71
IC83 #158
IC82 #157
IC76 2148
IC75 2148
IC60 #157
IC78 2148
IC77 2148
IC61 #157
IC73 74198
IC74 74198
IC95 74198
IC72 #158
IC57 2732 OR 2764
IC58 2732 OR 2764
IC41 2732 OR 2764
IC90
IC89
IC79 #157
IC80
IC85
IC66
IC45 #161
IC46 #161
IC47 #161
IC39 #245
IC37 #245
IC69 74LS04
IC68 74LS32
IC67 74LS32
IC7 74LS08
IC9 74LS02
IC30 74LS10
IC26 74LS86
IC25 74LS74
IC64 74LS86
IC84 74LS86
IC94 74LS86
IC11 74LS74
IC10 74LS373
IC47 74LS373
IC8 74LS00
IC43 #161
IC44 #161
IC5 74LS25
IC36 74LS139
IC6 74LS139
IC33 74LS86
IC1 74LS04
IC42 74LS32
IC39 74LS20
IC66 74LS20
Q1 2N3904
Q2 2N3904
Q3 2N3904
Q4 2N3904
Q5 2N3904
Q6 2N3904
Q7 2N3904
Q8 2N3904
Q9 2N3904
BLUE
GREEN
RED
1N4148
D-9967
16-8874
WILLIAMS ELECTRONICS, INC.
3401 N. CALIFORNIA AVE CHICAGO IL. 60618
SCHEMATIC, VIDEO
DO NOT SCALE WORK TO DIMENSIONS SHOWN
REMOVE BURRS - BREAK SHARP EDGES
S.C. HERSHLER
J. TURKINGTON
3025
SHT 2 OF 2

REV	DESCRIPTION OF CHANGE	ECN NO DATE
	NEW PART RELEASE	12618 3-4-84
A	ITEMS 23, 30, 31, AND 32, QTY WAS 1, RELOCATED ITEM 34	12889 4-20-84

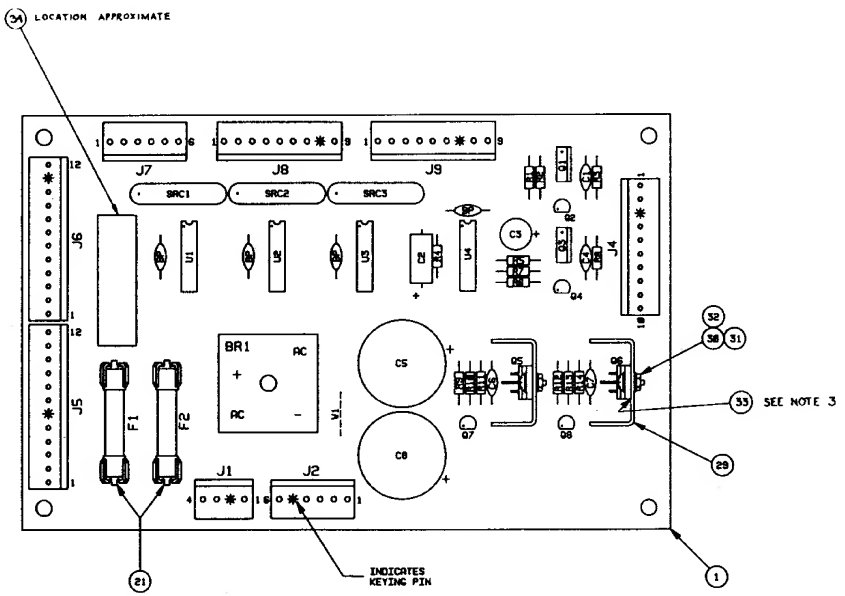

NOTES:

1. FOR SCHEMATIC, REFER TO DRAWING NO. 16-8910.
2. RESISTOR, 4.7K; R1, R2, R6, R7, R10, R13.
3. APPLY ITEM 33 BETWEEN ITEMS 7 & 29.

ITEM	PART NO.	PART DESIGNATION	DESCRIPTION	QTY.
34	16-8850-113		LABEL - PCB ASSY ID	1
33	20-9229		THERMAL COMPOUND	.010
32	4703-00007-00		#6 EXT. TOOTH LOCKWASHER	2
31	4406-01117-00		6-32 HEX NUT	2
30	4006-01003-06		6-32 x 3/8 P-H.S. SCREW	2
29	5705-09199-00		HEATSINK	2
28	5010-09548-00	R11, R14	RESISTOR, C.F., 68 OHM 2% 1/4 WATT	2
27	5791-09028-00	J1	4-PIN HEADER, 09-65-1041	1
26	5791-09038-00	J2, J7	6-PIN HEADER, 09-65-1061	2
25	5791-09027-00	J8, J9	9-PIN HEADER, 09-65-1091	2
24	5791-09444-00	J4	10-PIN HEADER, 09-65-1101	1
23	5791-09043-00	J5, J6	12-PIN HEADER, 09-65-1121	2
22	5731-09651-00	F1, F2	FUSE, S.B. 5 A. 250V	2
21	5732-09178-00		FUSEHOLDER	4
20	5043-08980-00	BP	CAPACITOR, AXL. .01 MFD. 50V +80-20%	4
19	5043-08996-00	C1, C4, C6, C7	CAPACITOR, AXL. .1 MFD. 50V +/-20%	4
18	5041-09243-00	C2	CAP., ELECT. AXL. 10 MFD. 10V +/-10%	1
17	5040-09776-00	C3	CAP., ELECT. RAD. 470 MFD. 16V +/-20%	1
16	5040-09504-00	C5, C8	CAP., ELECT. RAD. 4700 MFD. 35V +50-10%	2
15	5010-09534-00	V1	RESISTOR, C.F., 0 OHM	1
14	5010-09113-00	R5	RESISTOR, C.F., 33K OHM 5% 1/4 WATT	1
13	5010-08774-00	R4	RESISTOR, C.F., 22K OHM 5% 1/4 WATT	1
12	5010-09224-00	R3, R8	RESISTOR, C.F., 270 OHM 5% 1/4 WATT	2
11	5010-09358-00	R9, R12	RESISTOR, C.F., 1K OHM 5% 1/4 WATT	2
10	5010-08991-00	SEE NOTE #2	RESISTOR, C.F., 4.7K OHM 5% 1/4 WATT	6
9	5161-08979-00	Q1, Q3	TRANSISTOR, 2N6122 NPN	2
8	5190-10270-00	Q2, Q4, Q7, Q8	TRANSISTOR, 2N3906 PNP	4
7	5162-09410-00	Q5, Q6	TRANSISTOR, TIP122 NPN	2
6	5100-09690-00	BR1	BRIDGE RECTIFIER, 35 A. 200V	1
5	5060-10396-00	SRC1, SRC2, SRC3	SIP, 4.7K, 470 PFD., 8R, 8C	3
4	5310-08975-00	U1	I.C., 4049 CMOS HEX. INVERTER	1
3	5281-10007-00	U4	I.C., 74LS123 DUAL MLT/VIB	1
2	5281-09738-00	U2, U3	I.C., 74LS157 QUAD 2 TO 1 MLTPX	2
1	5772-10697-00		BARE P.C. BOARD	1

BILL OF MATERIALS

PROJ ENGR	DO NOT SCALE WORK TO DIMENSIONS SHOWN	REMOVE BURRS – BREAK SHARP EDGES	WILLIAMS ELECTRONICS, INC. 3401 N CALIFORNIA AVE CHICAGO IL 60618
DWN BY R. GAY DATE 4/3/84		TOLERANCES UNLESS OTHERWISE SPECIFIED FRACTIONAL ±1/64 ANGULAR ±1° DECIMAL ±.005 FILLETS .020 MAX	NAME WIDGET P.C. BOARD ASSEMBLY
CHECKED BY DATE	FIRST PROJECT NO 3025	MATERIAL NONE	SCALE 1.5/1 SHT 1 OF 1 PART NO D-10413 REV A
APPROVAL DATE 4-1-84	FIRST USAGE D-10427 QTY 1		

D-10413

REV	DESCRIPTION OF CHANGE	ECN NO DATE
	NPR	12618 4-11-84

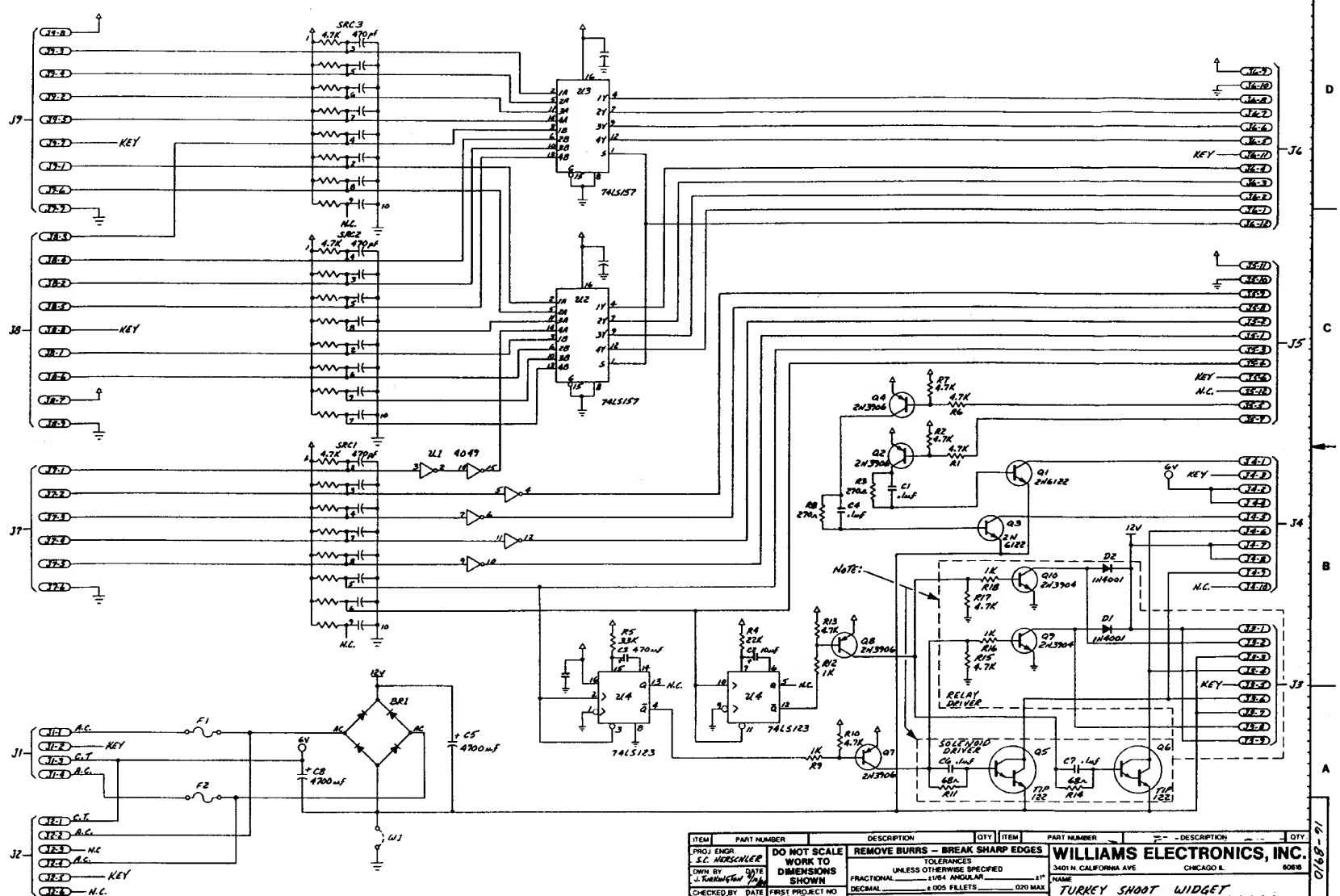

NOTE:
USE ONLY SOLENOID DRIVER COMPONENTS FOR 3025 (TURKEY SHOOT)
RELAY DRIVER COMPONENTS ARE FOR FUTURE USE

ITEM	PART NUMBER	DESCRIPTION	QTY	ITEM	PART NUMBER	DESCRIPTION	QTY

PROJ ENGR. S.C. HERSCHLER
DWN BY J. TURKINGTON DATE 9/10/84
CHECKED BY [illegible] DATE 9/11/84
APPROVAL [illegible] DATE 4-11-84

DO NOT SCALE WORK TO DIMENSIONS SHOWN
FIRST PROJECT NO 3025
FIRST USAGE D-10413 QTY —

REMOVE BURRS – BREAK SHARP EDGES
TOLERANCES UNLESS OTHERWISE SPECIFIED
FRACTIONAL ±1/64 ANGULAR ±1°
DECIMAL ±.005 FILLETS .020 MAX
MATERIAL

WILLIAMS ELECTRONICS, INC.
3401 N. CALIFORNIA AVE CHICAGO IL 60618
NAME TURKEY SHOOT WIDGET
SCALE -/- SHT 1 OF 1 PART NO 16-8910 REV

16-8910

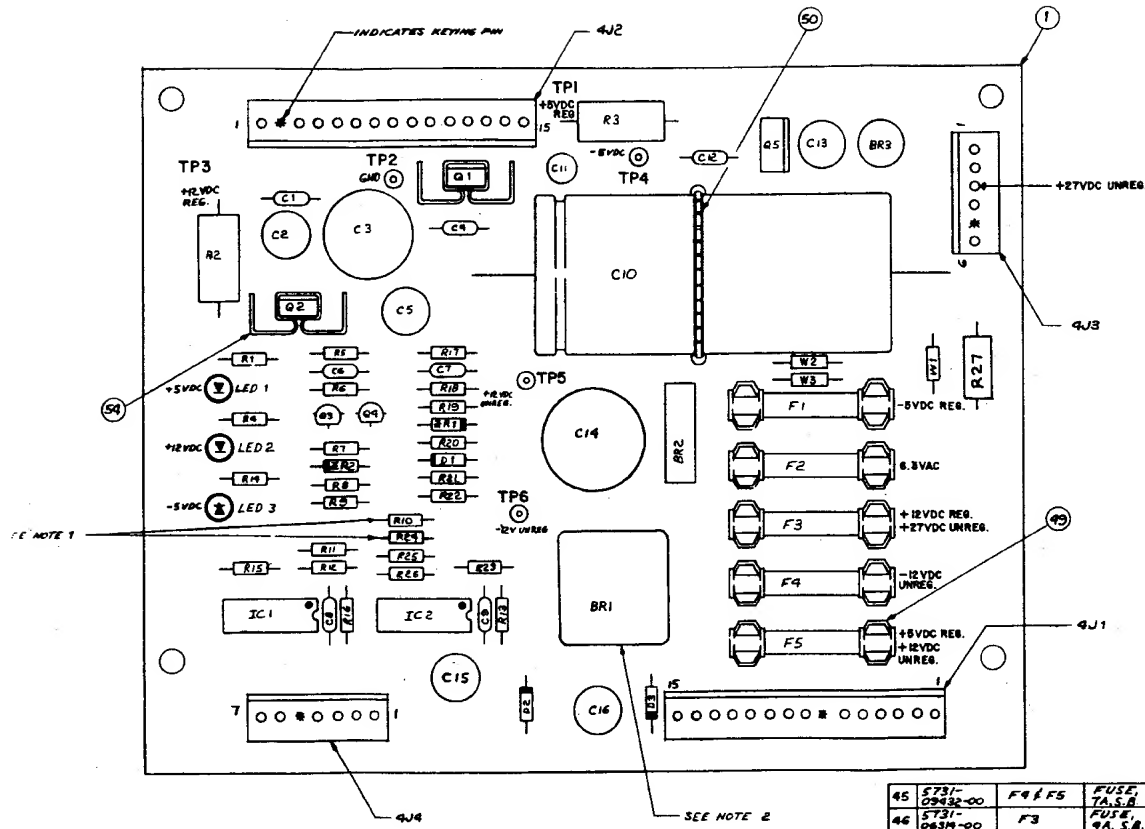

NOTES:
1. REMOVE R24 IF +5VDC IS GREATER THEM 5.25 VDC, REMOVE R10 IF +5VDC IS LESS THAN 4.75 VDC.
2. BR1 MUST BE MOUNTED 1/8" ABOVE SURFACE OF BOARD.
3. FOR SCHEMATIC REFER TO 16-8811.

BILL OF MATERIAL

ITEM NO.	PART NO.	PART DESIGNATION	DESCRIPTION	REQ'D NO.
1	5773-09679-00		BARE P.C. BOARD	1
2	5010-09085-00	R23	RESISTOR, 1.5K 5%, 1/4W	1
3	5010-09541-00	R13, R15	RESISTOR, 2.7K 2%, 1/4W	2
4	5010-09508-00	R21	RESISTOR, 470Ω 2%, 1/4W	1
5	5010-09468-00	R20	RESISTOR, 1.5K 2%, 1/4W	1
6	5010-09509-00	R16	RESISTOR, 1.1K 2%, 1/4W	1
7	5010-09510-00	R7	RESISTOR, 12K 2%, 1/4W	1
8	5010-09319-00	R4	RESISTOR, 1.1K 5%, 1/4W	1
9	5010-09916-00	R1, R14	RESISTOR, 470Ω 5%, 1/4W	2
10	5013-09542-00	R11	RESISTOR, 7.32K 1%, 1/4W	1
11	5013-09427-00	R12	RESISTOR, 4.22K 1%, 1/4W	1
12	5013-09426-00	R25	RESISTOR, 2.15K 1%, 1/4W	1
13	5012-09429-00	R3	RESISTOR, .12Ω 5%, 6W	1
14	5012-09512-00	R2	RESISTOR, 8.2Ω 5%, 5W	1
15	5013-04037-00	R27	RESISTOR 0.2Ω 3%, 3W	1
16	5013-09665-00	R26	RESISTOR 5.11K 1%, 1/2W	1
17	5010-09434-00	R6, R18	RESISTOR, C.F. 82Ω ± 5% 1/4W	2
18	5010-09036-00	R5, R9, R17 & R22	RESISTOR, C.F. 100Ω ± 5% 1/4W	4
19	5010-09089-00	R8, R19	RESISTOR, C.F. 10Ω ± 5%, 1/4W	2
20	5010-09534-00	W1	RESISTOR, 0Ω	1
21	5043-08996-00	C6, C7	CAPACITOR, 0.1MF CERAMIC +80% -20% 50V	2
22	5040-09421-00	C2, C16	CAPACITOR, 100 MFD, 25V RADIAL +50% -10%	2
23	5040-09422-00	C15	CAPACITOR, 47 MFD, 50V RADIAL +50% -10%	1
24	5040-09420-00	C3	CAPACITOR, 1000 MFD, 25V RADIAL +75% -10%	1
25	5040-09419-00	C10	CAPACITOR, 18,000 MFD 20V AXIAL +75% -10%	1
26	5040-09423-00	C5	CAPACITOR, 330 MFD 10V RADIAL +50% -10%	1
27	5040-09504-00	C14	CAPACITOR 470 MFD 35V RADIAL +50% -10%	1
28	5043-09446-00	C1, C4 & C12	CAPACITOR .1 MFD 50V AXIAL 85U -20 +80%	3
29	5043-08065-00	C9	CAPACITOR 470 PFD 50V AXIAL X7R ± 10%	1
30	5043-09432-00	C8	CAPACITOR 100 PFD 50V AXIAL 52L ± 5%	1
31	5040-09506-00	C13	CAPACITOR 220 MFD 16V RADIAL +50% -10%	1
32	5040-09493-00	C11	CAPACITOR 22 MFD 10V RADIAL +50% -10%	1
33	5070-08258-00	Q1, Q2 & Q3	DIODE, IN4001	3
34	5075-09406-00	ZR1	ZENER IN5234 ± 5% (6.2V)	1
35	5075-09662-00	ZR2	ZENER IN5249 ± 5% (19V)	1
36	5130-09430-00	Q3, Q4	TRANSISTOR MPS A55	2
37	5130-08661-00	Q1, Q2	SCR 8 AMP, 400 V	2
38	5150-09315-00	Q5	VOLTAGE REGULATOR, 7805	1
39	5460-09426-00	IC1, IC2	VOLTAGE REGULATOR, 723	2
40	5100-09499-00	BR1	BRIDGE RECTIFIER, 35 AMP, 100V	1
41	5100-09513-00	BR2	BRIDGE RECTIFIER, 5.0A, 50V	1
42	5100-08514-00	BR3	BRIDGE RECTIFIER, 1.0A, 50V	1
43	5671-09018-00	LED1, LED2, LED3	LED, RED	3
44	5849-09248-00	TP1 — TP6	TERMINAL 44/50R-1 (TEST POINT)	4
45	5731-09432-00	F4 & F5	FUSE, TA.S.B	2
46	5731-04339-00	F3	FUSE, 4A, S.B., 250V	1
47	5731-06569-00	F1	FUSE, 1A, S.B. 250V	1
48	5731-09651-00	F2	FUSE, 3A, S.B. 250V	1
49	5732-09178-00		FUSEHOLDER,	10
50	03-7620		TIE WRAP	1
51	5731-09079-00	4J1 & 4J2	HEADER, 15 PIN 09-65-1151	2
52	5731-09039-00	4J3	HEADER, 6 PIN 09-65-1061	1
53	5731-09327-00	4J4	HEADER, 7 PIN 09-65-1071	1
54	5704-07663-00		HEAT SINK	2
55	5705-09699-00		HEAT SINK	0
55	5010-09886-00	R10	RESISTOR C.F. 51K ± 5% 1/4 W	1
56	5010-09324-00	R24	RESISTOR C.F. 27K ± 5% 1/4W.	1
ITEM NO.	PART NO.	PART DESIGNATION	DESCRIPTION	REQ'D NO.

D-8784 Power Supply Board Assembly Drawing

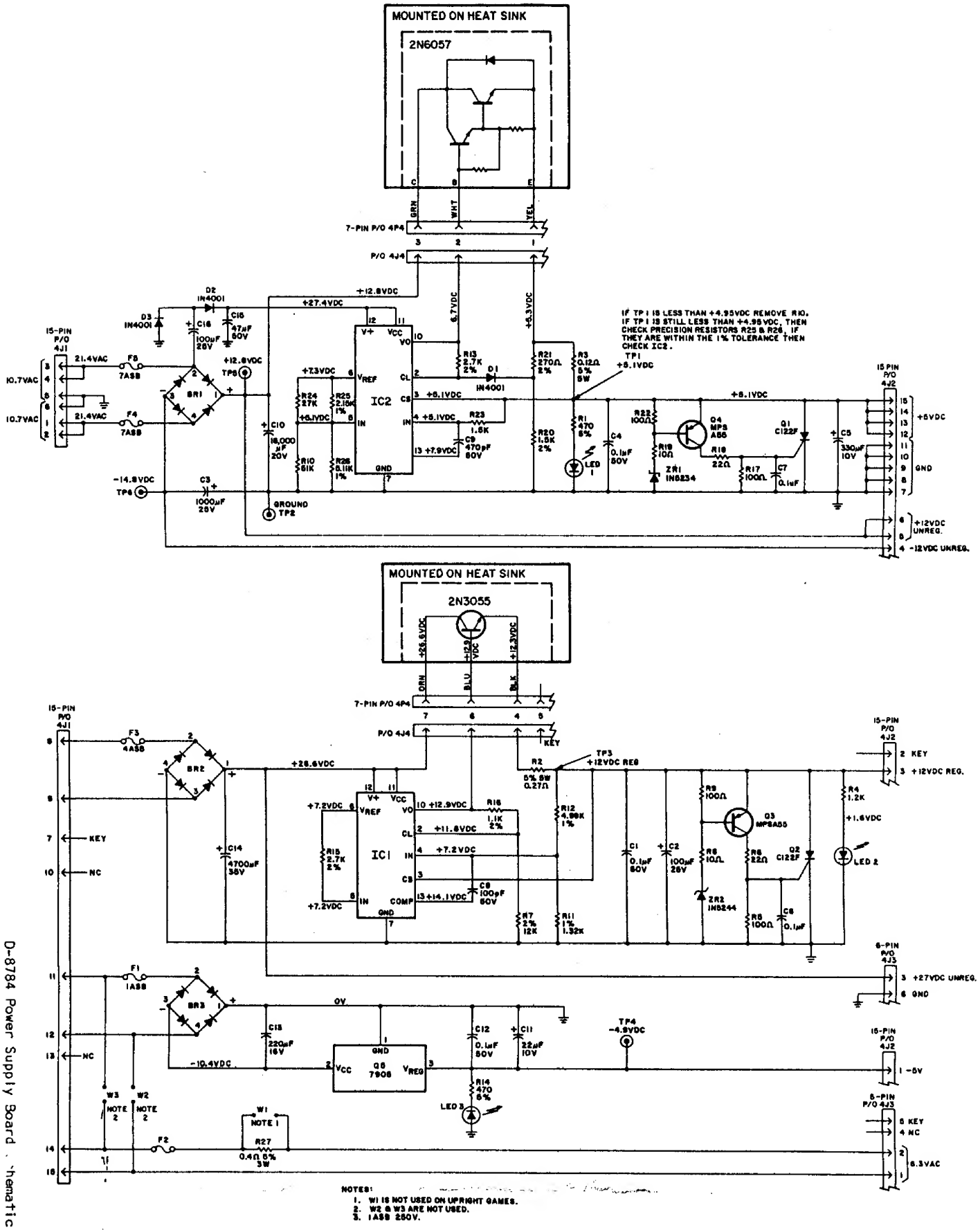

D-8784 Power Supply Board Schematic Diagram